University of Glasgow | Experimental Particle Physics

GLAS-PPE/2008-20
18th November 2008

Department of Physics and Astronomy
Experimental Particle Physics Group
Kelvin Building, University of Glasgow,
Glasgow, G12 8QQ, Scotland
Telephone: +44 (0)141 330 2000 Fax: +44 (0)141 330 5881

First particle results for the HEPAPS4 characterisation

A. Laing[1], L. Eklund[1], D. Maneuski[1], R. Turchetta[2], J.J. Velthuis[3]

[1] University of Glasgow, Glasgow, G12 8QQ, Scotland

[2] Rutherford Appleton Laboratory, Harwell Science and Innovation Campus, Didcot, OX11 0QX, UK

[3] University of Bristol, H.H. Wills Laboratory, Tyndall Avenue, Bristol, BS8 1TL, UK

Abstract

Monolithic Active Pixel Sensors (MAPS) form part of a set of new detector technologies currently under study as possible vertex and tracking sensors to be used in future high energy physics (HEP) experiments. The most active research is being carried out as part of R&D for future e^+e^- colliders while such devices are also a possibility for vertexing at a neutrino factory near detector. Here presented are preliminary results for particle detection using the HEPAPS4 chip.

The HEPAPS4 chip is a large area sensor of standard 3T type, specifically designed for charged particle detection. This paper will report on the response of this device to charged particles from a 6GeV e^- testbeam and a ^{90}Sr β source. Presented are S/N and cluster size data.

PSD08
Glasgow

1. Introduction

Future particle physics experiments will require high resolution vertex and tracking detectors capable of fast targeted readout. Active Pixel Sensors (APS) can be manufactured as low mass thin wafers using standard industrial techniques and can have in-pixel digitization. This, combined with radiation tolerance high enough for a lepton collider, means that this technology can fulfill many of the requirements of these experiments without the high costs associated with detectors produced in specialised processes.

Here we describe the testing of one such device, the HEPAPS4 chip [1], under the passage of 6GeV electrons from the DESY synchrotron and MIP energy electrons from a strontium-90 β-source – following on from the work carried out in [2].

2. The HEPAPS4 chip

HEPAPS4 utilises standard three NMOS technology – where each pixel contains 3 transistors to control reset, amplification and readout, *see Fig. 1* – and is designed specifically for low noise readout of particle hit information at the speeds required for a lepton collider. The large 1024×384 pixel array is comprised of $15\mu m \times 15\mu m$ pitch pixels. Traversing particles deposit charge in the $20\mu m$ p-type epitaxial layer. The charge then diffuses to the n-type well to be collected, normally in more than one pixel (for more information on the structure of HEPAPS4 see [3]). HEPAPS4 is the latest in a line of Monolithic Active Pixel Sensors (MAPS) designed for particle experiments by the UK MAPS Project [4] whose predessesors have been tested in similar ways [5].

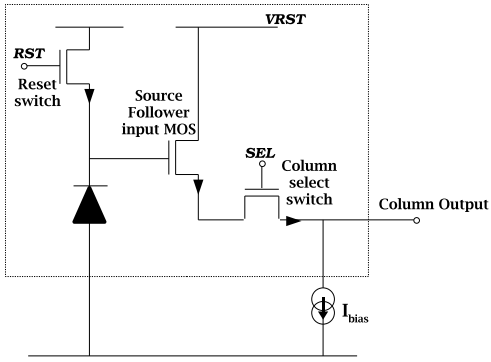

Fig. 1. *Schematic of a basic MAPS pixel*

3. DESY Beam Test

As a test of the triggering logic implemented in the firmware of HEPAPS4 and as a first step towards testing the response of the device to charged particles, HEPAPS4 was exposed to 6 GeV e^- at DESY (Hamburg). Tracking data was provided by 5 silicon pixel devices (named ISIS [6]). However, due to the low beam energy – leading to high levels of multiple scattering – and the specifics of the telescope set-up tracking did not provide high enough precision for an accurate resolution measurement.

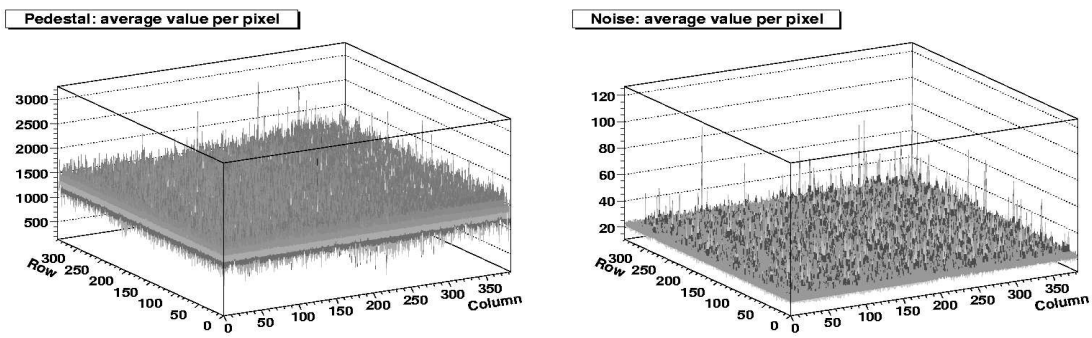

Fig. 2. *Pedestal and Noise for the each pixel in one region of interest*

Each frame was corrected using a pedestal frame calculated for each pixel over a range of frames before signal was considered. The noise was then calculated for each pixel (examples of both pedestal and noise found in Fig.

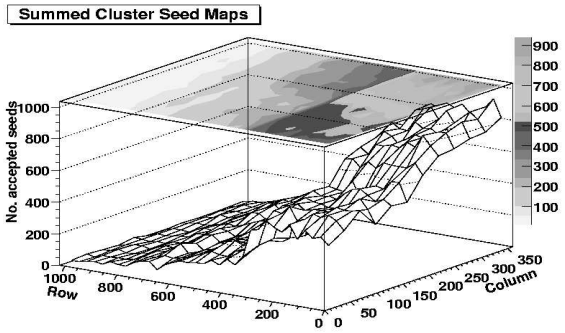

Fig. 3. *Distribution of accepted seeds in one ROI. Center of beam indicated from row 150*

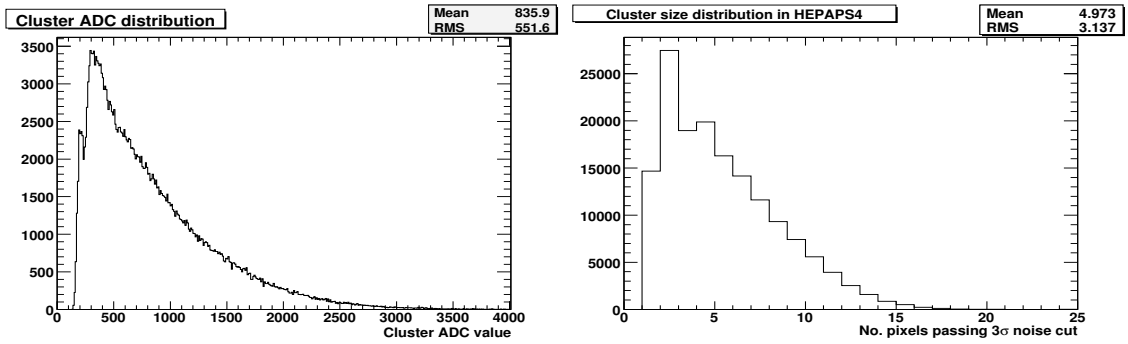

Fig. 4. *Cluster analysis results for DESY beam test: Signal distribution in ADC. Signal distribution in number of pixels.*

2). Analysis of the data was based on a clustering algorithm that relied on identifying isolated[1)] high significance, S/N, seeds with lesser significance associated pixels – 7σ seeds with 3σ cluster pixels in the surrounding 5×5 region for the results shown, *Fig. 4*.

The hit map shown in *Fig. 3* was the first indication of beam sensitivity. Although the full circular beam profile is not seen, a large enough section of the beam is in the field of view of the detector. Full analysis of the clusters associated with these seeds yields a measurement of the most likely signal strength and cluster size at this energy, shown in *Fig. 4*.

While the results of the beam test confirmed the devices response to charged particles the setup was found to be dominated by system noise, with a mean level of 23 ADC counts. Sub-optimal sample timing resulted in a non-uniform gain across the array so that conversion to electron charge was not possible. Optimisation of the system – including improved timing settings and the use of shorter, higher quality cables with greater shielding – before source testing was necessary to fully understand the response of the detector.

4. ^{90}Sr source tests

A high activity (4MBq) ^{90}Sr β source was next used to test the device. Experiments were carried out using a setup containing a PMT read out scintillator for triggering. Considering a Region of Interest (ROI) consisting of the central 600 rows and the full 384 columns we find the noise level distributed with a most probable value at ~ 13 *ADC* (*see Fig. 5*). The gain for this version of HEPAPS4 was measured to be 5.1 e/ADC using the PTC method [1] and the same row/column/multiplexer (mux) settings[2)]. The resulting noise level of ~ 77 e is slightly greater than the 54 e calculated in [1]. This is most likely due to the different ROI used here which involves a greater number of pixels, particularly pixels from the edge of the device, in addition to the use of cables with a greater level of shielding in [1].

Applying the same S/N cuts as in the beam test analysis, clustering should give an indication of MIP energy deposition in the device. However, the low energy part of the ^{90}Sr spectrum will increase the high energy part of the distribution and, as demonstrated in [7], we should already expect a distribution of cluster signal with a broad peak which is not consistent with a convoluted Landau and Gaussian distribution. Energy loss of a MIP in silicon is strongly correlated with the silicon thickness with the Poisson statistical nature of the primary interaction processes meaning that there is even possibility of zero charge deposition in very thin layers.

[1] A seed is considered isolated if it is the highest significance pixel in a 3×3 region centred in a 9×9 region where other pixels passing the seed cut are only allowed in the central region

[2] specifically delay times which control sample and reset times for each readout

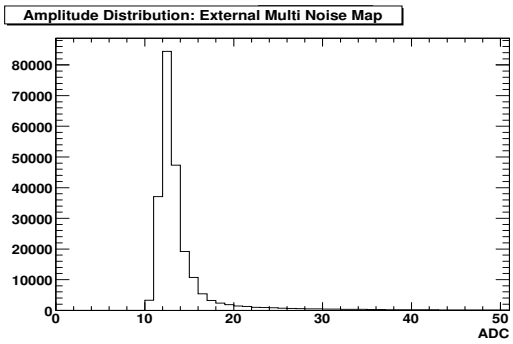

Fig. 5. *Noise distribution calculated from 1800 dark frames*

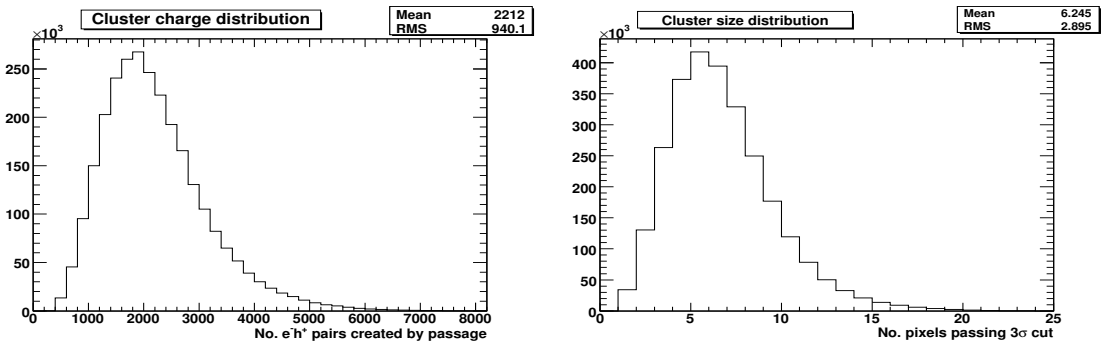

Fig. 6. *Source cluster analysis results: Cluster signal distribution, Cluster size distribution.*

The most probable value of 1775 electrons for the signal is larger than the $\sim$ 1100 electrons expected for a MIP traversing $20\mu m$ of silicon (*as calculated in [7]*) when considering a 10% error in the measured value. However, when we consider the low energy part of the ^{90}Sr spectrum which would deposit a greater amount of energy and distortion caused by angled tracks in addition to known effects of diffusion from outside the epitaxial layer we can account for this difference.

5. Conclusions

Response of the device to 6 GeV electrons has been proven. In addition, initial studies with β source electrons have allowed for a measurement of the MIP response of the detector consistent with theoretical expectations. Comparison of the charge scale with photonic measurements finds good agreement.

Acknowledgments

The authors thank DESY, EUDET and LCFI for beam time and support.

References

[1] D. Maneuski, et al., Characterisation of HEPAPS4 - a family of Active pixel sensors, Proceedings of PSD8.
[2] L. Eklund, et al., First results from the HEPAPS4 active pixel sensor, doi:10.1016/j.nima.2008.08.076.
[3] R. Turchetta, RAL HEPAPS4 manual (2006).
[4] J. Velthuis, et al., Status of the UK MAPS Project, Proceedings of LCW 2005.In the Proceedings of 2005 International Linear Collider Workshop (LCWS 2005), Stanford, California, 18-22 Mar 2005.
[5] J. J. Velthuis, et al., A monolithic active pixel sensor for particle detection in 0.25-mu CMOS technology, Nucl. Instrum. Meth. A560 (2006) 40–43.
[6] J. Velthuis, et al., First results of the ISIS1 beam test, Preprint Submitted elsevier for NIM A.
[7] H. Bichsel, STRAGGLING IN THIN SILICON DETECTORS, Rev. Mod. Phys. 60 (1988) 663–699.